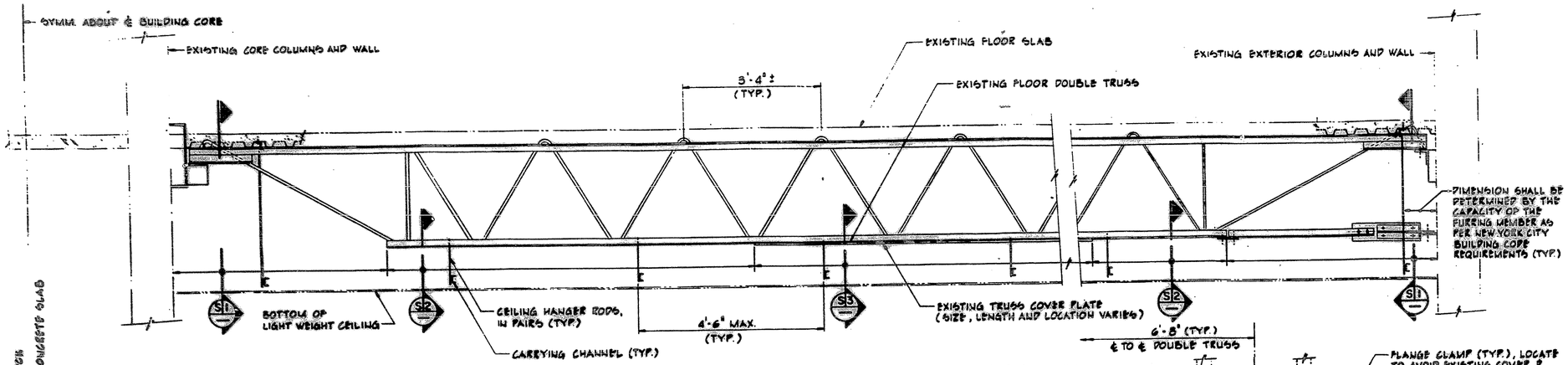

PART ELEVATION
TYPICAL FLOOR DOUBLE TRUSS

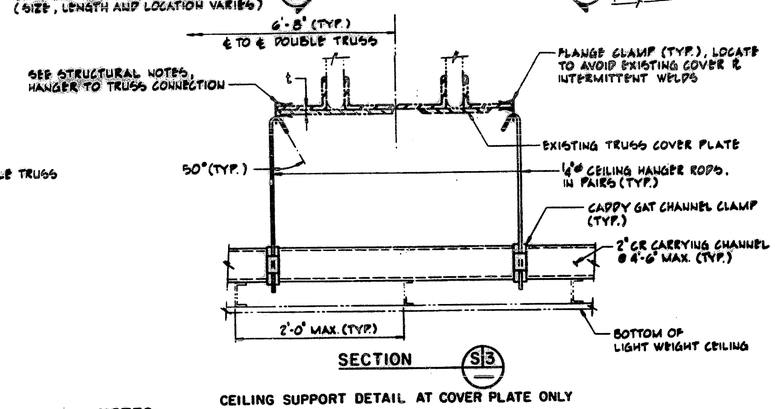

SECTION S3

CEILING SUPPORT DETAIL AT COVER PLATE ONLY

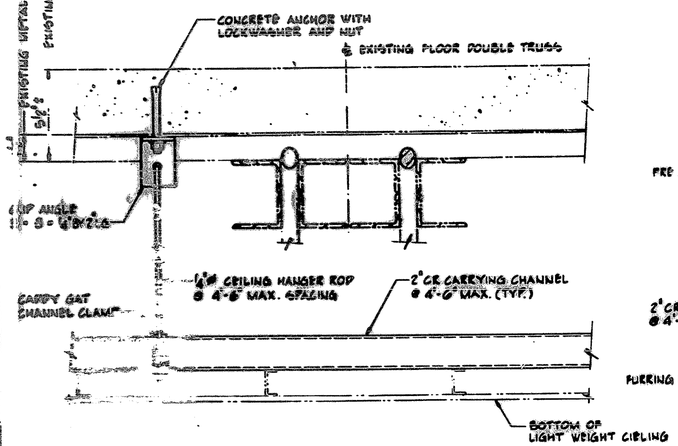

SECTION S1

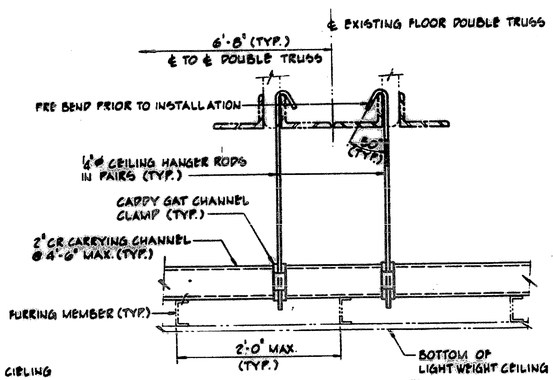

SECTION S2

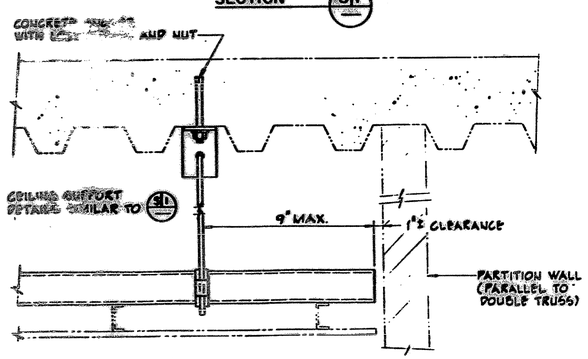

TYPICAL SECTION AT PARTITION WALL

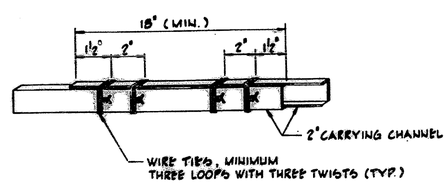

TYPICAL 2" CHANNEL SPLICE DETAIL

NOTES:

1. MATERIALS
   - CONCRETE ANCHORS - 3/8"ø LIEBIG SAFETY BOLTS (TYPE LSW OR LSH) WITH A MINIMUM EMBEDMENT OF 1 3/4", OR HILTI HSL OR HSLD ANCHORS, SIZE M8 WITH A MINIMUM EMBEDMENT OF 2 1/2" AND A MAXIMUM EMBEDMENT LENGTH OF 3".
   - CLIP ANGLES - HOT ROLLED ASTM A36 STEEL.
   - HANGERS - 1/4"ø A36 GALVANIZED STEEL ROD
   - CARRYING CHANNEL - 2" COLD ROLLED CHANNELS - (Fy = 33 ksi MIN.) - MINIMUM WEIGHT 390 LBS./1,000 L.FT. (PAINTED)
   - HANGER TO TRUSS CONNECTION - AT COVER PLATE ONLY
     - A. THICKNESS OF BOTTOM FLANGE OF TRUSS $t \leq 0.75"$: CADDY HEAVY DUTY FLANGE CLAMPS MANUFACTURED BY ERICO PRODUCTS INC. - BGA # 1312-64-SM.
     - B. THICKNESS OF BOTTOM FLANGE OF TRUSS $t > 0.75"$: UNIVERSAL C-CLAMP FIG. 95 (WIDE THROAT) 0.41 LBS. EACH AS MANUFACTURED BY GRINNELL CORP. OR APPROVED EQUAL. INSTALL C-CLAMP WITH SET SCREW IN TOP POSITION.
   - HANGER TO CARRYING CHANNEL - CADDY CAT CHANNEL CLAMP, MODEL 4BZLS, MANUFACTURED BY ERICO PRODUCTS INC. - BGA # 131-GS-SM.
   - WIRE TIES - 16 GA. STAINLESS STEEL AISI - TYPE 304 OR MONEL METAL.
2. REMOVAL OF FIREPROOFING SHALL BE KEPT TO A MINIMUM AND SHALL BE REPLACED BY THE CONTRACTOR AS DIRECTED BY THE PORT AUTHORITY ARCHITECT.
3. THE CONTRACTOR SHALL BE REQUIRED TO SUBMIT CATALOG CUTS, SAMPLES, LAYOUT DRAWINGS AND DETAILS OF ALL COMPONENTS OF THE CEILING SUPPORT SYSTEM FOR THE PORT AUTHORITY ARCHITECT'S APPROVAL PRIOR TO THE START OF ANY WORK IN THE FIELD.
4. OTHER CEILING COMPONENTS AND DETAILS NOT SHOWN SHALL CONFORM TO THE LATEST NEW YORK CITY BUILDING CODE REQUIREMENTS.
5. THE RAMSET FASTENING SYSTEM WITH LADD DRIVE PIN # 684 (1 1/2" LONG), POWER LEVEL "RED" FOR INSTALLATION, AND THE LADD CEILING CLIP #651 IS PERMITTED TO SUBSTITUTE THE HANGER TOP CONNECTION DETAIL SHOWN IN SECTION S1, ANCHORED INTO 3000 P.S.I. LIGHT WEIGHT CONCRETE SLAB OVER GALVANIZED METAL DECK.

REGISTERED ARCHITECT ALFONSO S. D'ELIA No. 013250 STATE OF NEW YORK

NOTES:

ISSUES:

NO.	DATE	COPIES	ISSUE

NO.	DATE	REVISIONS

client name: CANTOR FITZGERALD
1 WORLD TRADE CENTER NEW YORK, N.Y.

drawing title: STRUCTURAL DETAILS
dwg. no. S-104-1

scale	proj. no.	date	floor
1/8"=1'-0"	RZ-1032-010	3/13/92	104
drawn by	approved by	sheet no. OF	

MANCINI • DUFFY
MANCINI DUFFY ASSOCIATES
SPACE PLANNERS AND INTERIOR DESIGNERS
ONE WORLD TRADE CENTER, NEW YORK, N.Y., 10048 212 938 1260

DRAWING NUMBER
PLAN-HOLD CORPORATION • IRVINE, CALIFORNIA
REGISTERED ARCHITECT ALFONSO S. D'ELIA
STATE OF NEW YORK

A-104
Cantor Fitzgerald
3/13/92
S-104-1

DRAWING NUMBER 445-131